Pale Ale

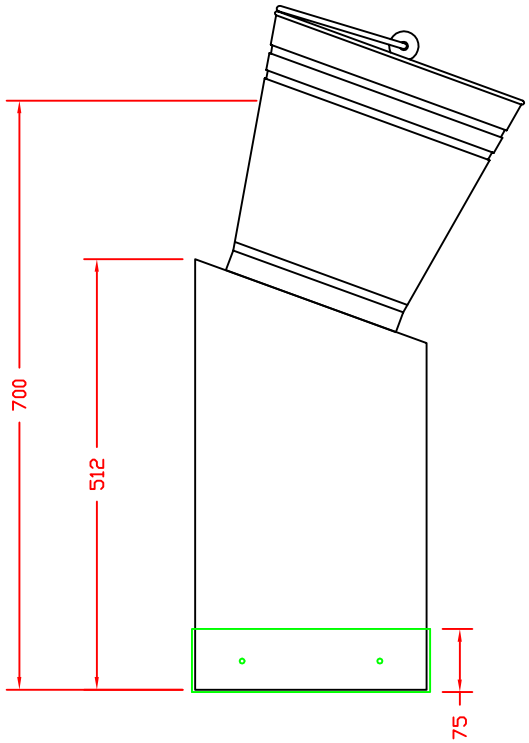

SIDE ELEVATION

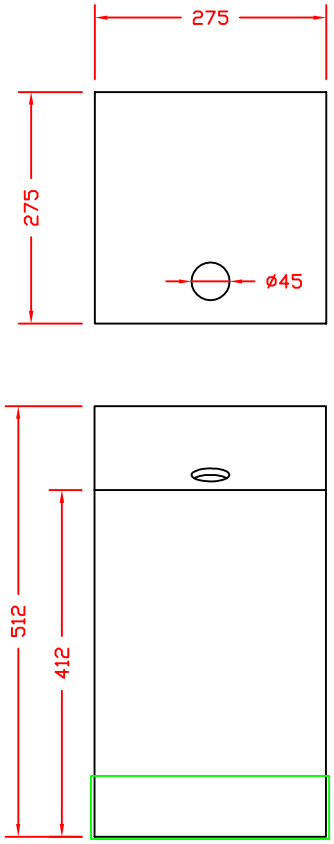

FRONT ELEVATION

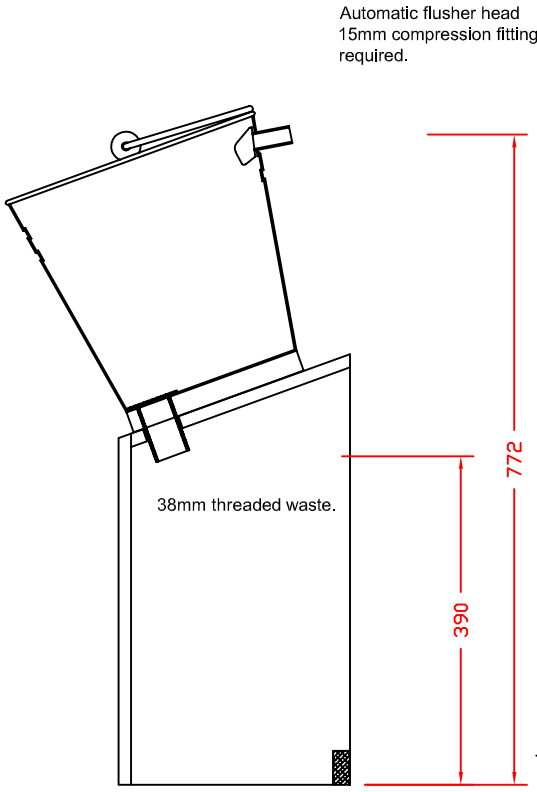

SECTION THROUGH

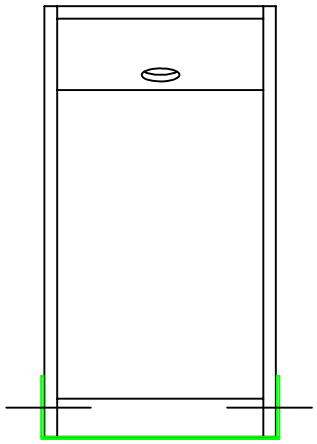

BACK ELEVATION

philip watts design

GENERAL NOTES:

THE CONTRACTOR SHALL CHECK AND VERIFY ALL DIMENSIONS ON SITE AND REPORT ANY DISCREPANCIES IN WRITING TO PHILIP WATTS DESIGN BEFORE COMMENCING WITH THE WORK.

ALL DRAWINGS ARE THE PROPERTY OF PHILIP WATTS DESIGN AND SHALL NOT BE REPRODUCED WITHOUT THE CONSENT OF THE DESIGNERS.

DRAWINGS SHALL NOT BE SCALED.

THIS DRAWING IS TO BE READ IN CONJUNCTION WITH THE RELEVANT SPECIFICATION OF BUILDING WORKS.

ALL DIMENSIONS ARE IN mm UNLESS OTHERWISE NOTED.

THIS DRAWING MAY INCORPORATE INFORMATION FROM OTHER PROFESSIONS. PHILIP WATTS DESIGN CANNOT ACCEPT RESPONSIBILITY FOR THE INTEGRITY AND ACCURACY OF SUCH INFORMATION.

IF IN DOUBT ASK !

original drawn by (name)	date	app by
-	-	-

drawing status:

APPROVED BY:

Name:	Date:

philip watts design
Unit 11: Byron Industrial Estate,
Brookfield Road, Arnold
Nottingham, NG5 7ER

t: 0115 926 9756
f: 0115 920 5395

sales@philipwattsdesign.com
www.philipwattsdesign.com

drawing title:
—

contract name
—

job number
—

drawing no & revision

scale
—

drawn by
—

date
—

checked
—